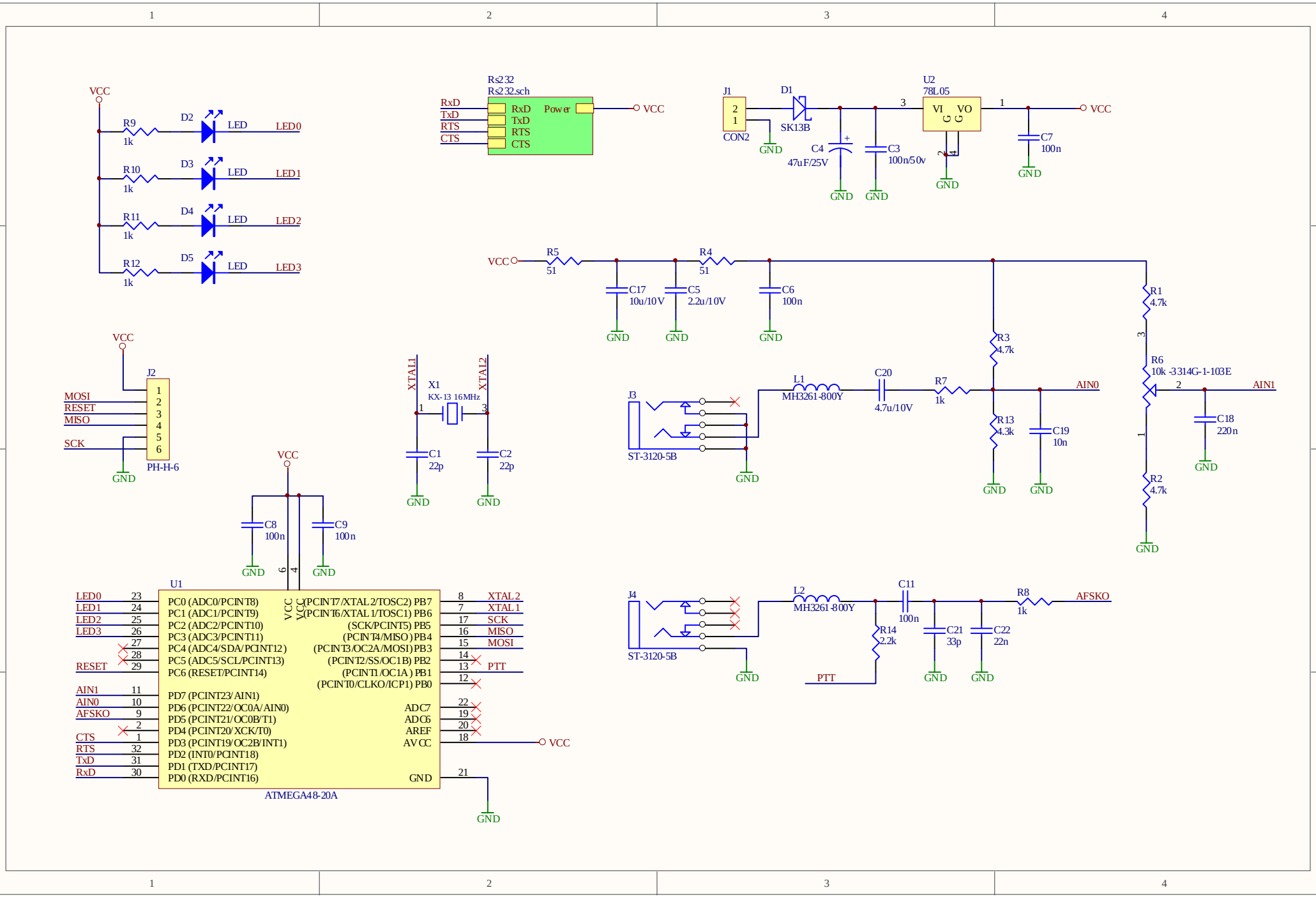
VCC
R9
1k
D2
LED
LED0
R10
1k
D3
LED
LED1
R11
1k
D4
LED
LED2
R12
1k
D5
LED
LED3
Rs232
Rs232.sch
RxD
TxD
RTS
CTS
Power
VCC
J1
CON2
D1
SK13B
GND
C4
47uF/25V
C3
100n/50v
U2
78L05
VI
VO
C7
100n
VCC
R5
51
R4
51
C17
10u/10V
C5
2.2u/10V
C6
100n
R1
4.7k
R3
4.7k
R6
10k -3314G-1-103E
AIN1
C18
220n
J2
MOSI
RESET
MISO
SCK
PH-H-6
XTAL1
X1
KX-13 16MHz
XTAL2
C1
22p
C2
22p
J3
ST-3120-5B
L1
MH3261-800Y
C20
4.7u/10V
R7
1k
AIN0
R13
4.3k
C19
10n
R2
4.7k
C8
100n
C9
100n
U1
LED0
LED1
LED2
LED3
RESET
AIN1
AIN0
AFSKO
CTS
RTS
TxD
RxD
PC0 (ADC0/PCINT8)
PC1 (ADC1/PCINT9)
PC2 (ADC2/PCINT10)
PC3 (ADC3/PCINT11)
PC4 (ADC4/SDA/PCINT12)
PC5 (ADC5/SCL/PCINT13)
PC6 (RESET/PCINT14)
PD7 (PCINT23/AIN1)
PD6 (PCINT22/OC0A/AIN0)
PD5 (PCINT21/OC0B/T1)
PD4 (PCINT20/XCK/T0)
PD3 (PCINT19/OC2B/INT1)
PD2 (INT0/PCINT18)
PD1 (TXD/PCINT17)
PD0 (RXD/PCINT16)
(PCINT7/XTAL2/TOSC2) PB7
(PCINT6/XTAL1/TOSC1) PB6
(SCK/PCINT5) PB5
(PCINT4/MISO) PB4
(PCINT3/OC2A/MOSI) PB3
(PCINT2/SS/OC1B) PB2
(PCINT1/OC1A) PB1
(PCINT0/CLKO/ICP1) PB0
ADC7
ADC6
AREF
AVCC
GND
XTAL2
XTAL1
SCK
MISO
MOSI
PTT
ATMEGA48-20A
J4
ST-3120-5B
L2
MH3261-800Y
C11
100n
R14
2.2k
C21
33p
C22
22n
R8
1k
AFSKO
PTT