NAND Flash memory & SmartMedia™

Feb. 2000

TOSHIBA

NAND / SmartMedia Concept

- **Suitable for file storage**
  - File memory architecture
  - Page programming (256 or 512 Byte)
- **High performance**
  - High speed programming and erasing
- **Low cost**
  - Small chip size based on NAND
  - Small pin count
  - Controller is not embedded(SmartMedia)
- **Easy memory expansion**
  - Simple interface by command control
  - Same package(SmartMedia)
- **Small form factor card**
  - 37mm×45mm×0.76mm 1.8g

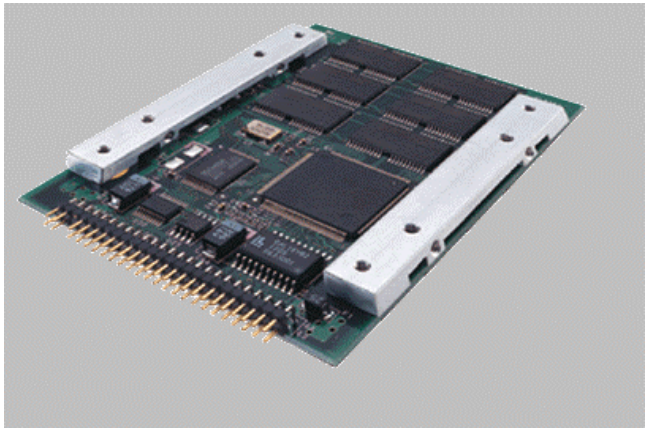

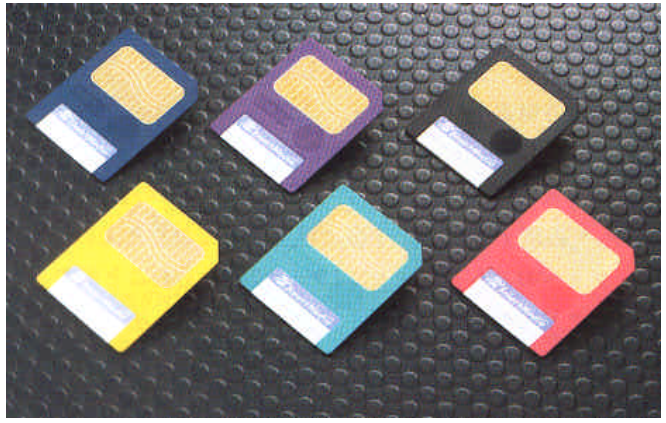

TOSHIBA

SmartMedia™

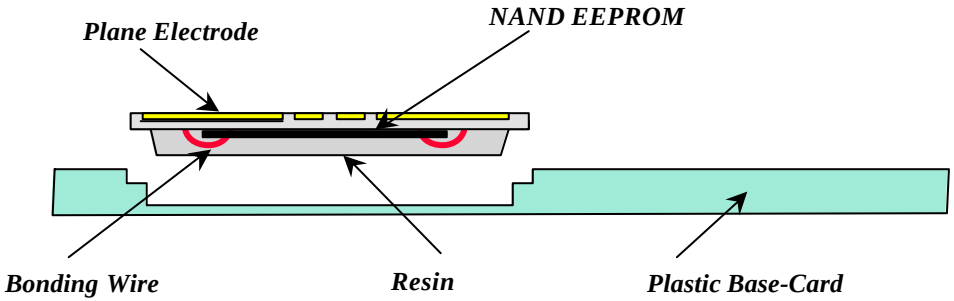

Cross-Sectional Structure

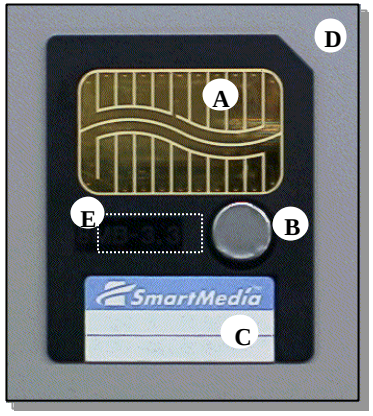

OMTP

Base Card

A) OMTP(Over Molded Thin Package)
B) Write-Protect-Seal Area
C) Index-Label Area
D) 5.0Voltage : Notch on the left
3.3Voltage : Notch on the right
E) Inscription Area

TOSHIBA

NAND EEPROM Block Diagram

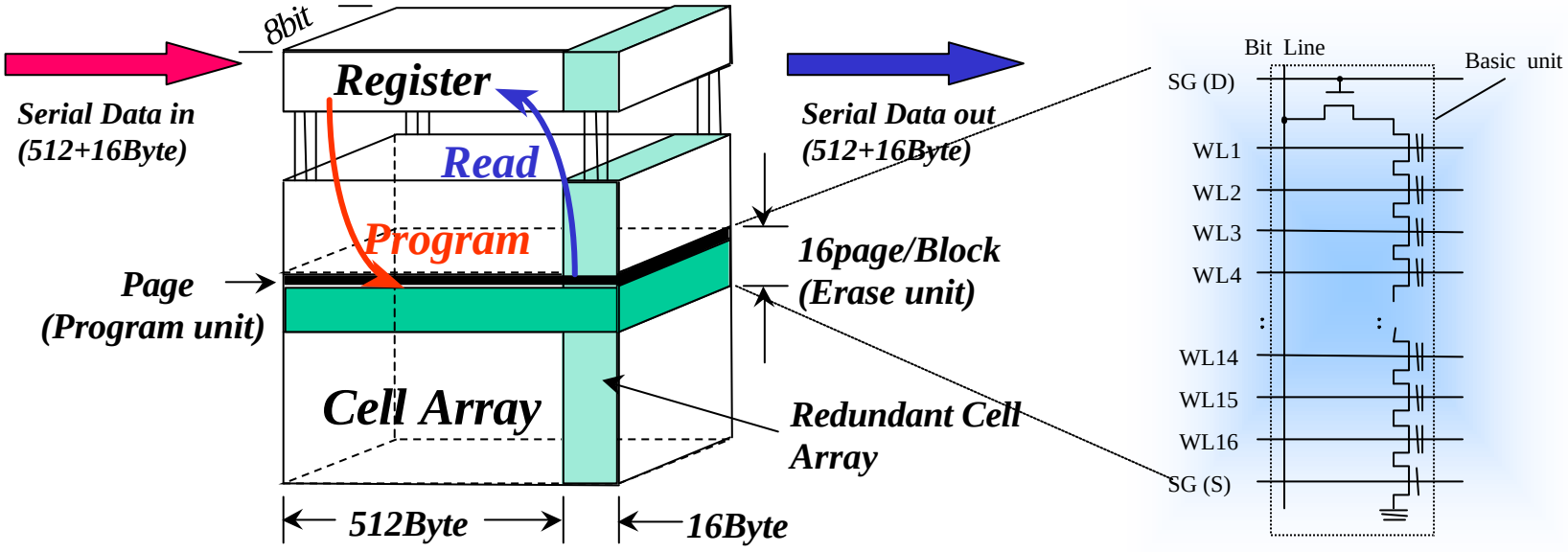

TOSHIBA

SmartMedia™ Physical Format

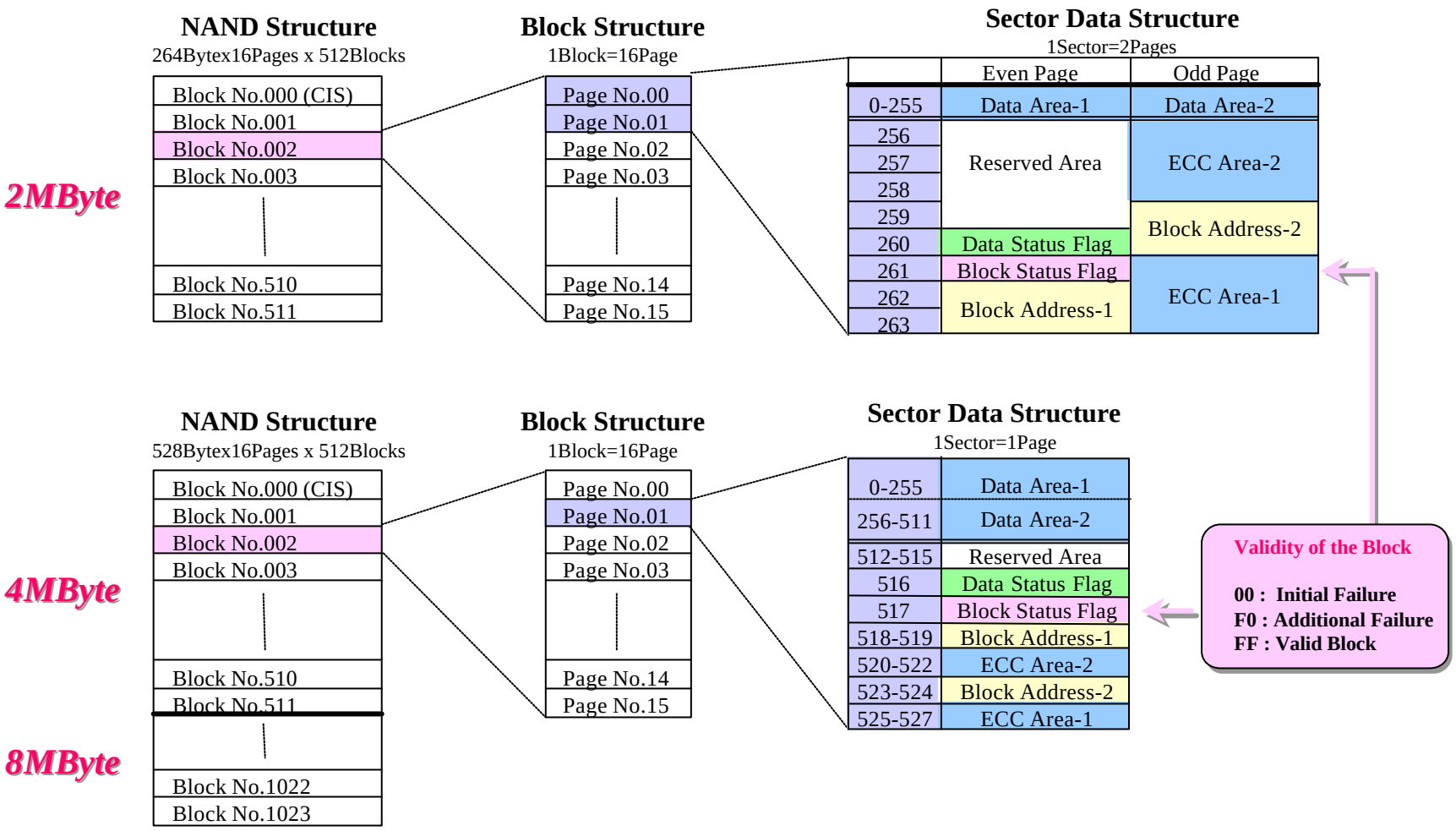

TOSHIBA

SmartMedia™ Comparison Table

	2MByte	4MByte	8MByte	16MByte	32MByte	64MByte	128MByte
? Device Organization							
· Vcc	5.0V / 3.3V	5.0V / 3.3V	3.3V	3.3V	3.3V	3.3V	3.3V
· Page size (program unit)	256B+8B	512B+16B	512B+16B	512B+16B	512B+16B	512B+16B	512B+16B
· Block size (erase unit)	4KB+128B	8KB+256B	8KB+256B	16KB+512B	16KB+512B	16KB+512B	16KB+512B
· Number of page per block	16	16	16	32	32	32	32
· Number of block per device	512	512	1024	1024	2048	4096	8192
? Function / Pinout							
· Function	Same Pinout & Same Function						
· Device pinout							

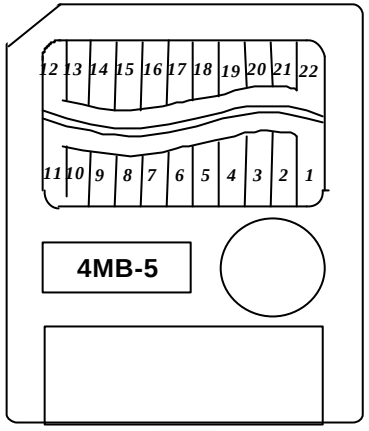

5Voltage Model

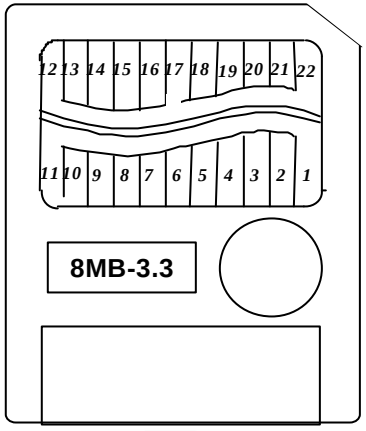

3.3Voltage Model

1,10,11	Vss	GND
2	CLE	Command Latch Enable
3	ALE	Address Latch Enable
4	/WE	Write Enable
5	/WP	Write Protect
6-9	I/O1-4	Input / Output Port
13-16	I/O5-8	Input / Output Port
17	LVD	Low Voltage Detect
18	GND	GND Input
19	R/B	Ready / Busy
20	/RE	Read Enable
21	/CE	Chip Enable
22,12	Vcc	Power Supply

Invalid block detection at Incoming

Number of valid blocks at shipping

	Min.	Max.
64Mb NAND	1014	1024
128Mb NAND	1004	1024
256Mb NAND	2008	2048
512Mb NAND	4016	4096

BAD BLOCK TEST FLOW

(ex.32M NAND)

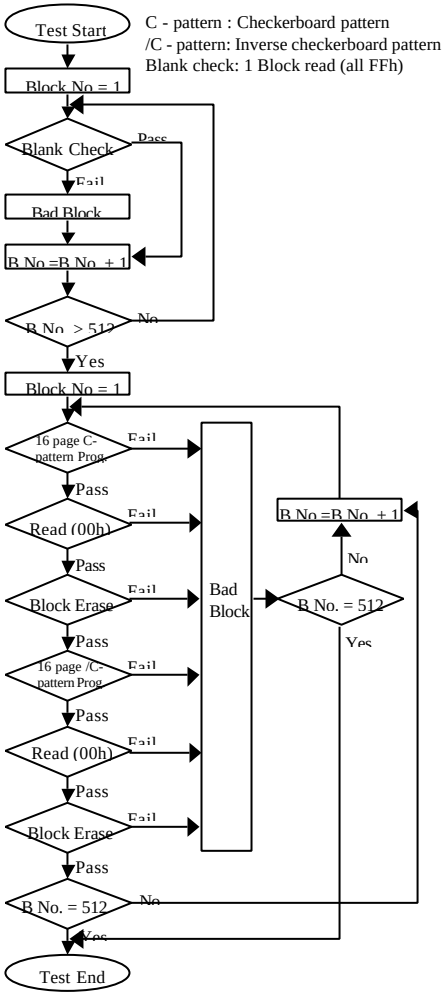

Invalid blocks have to be detected by bad block test flow before erasing.

- Invalid block : include “0” data. This “0” data may be lost by erasing.
- Valid block : has only “1” data.

TOSHIBA

NAND vs. NOR

Merit of NAND

High Speed Program

High speed Erase

Merit of NOR

High Speed Random Access

Byte Programming

Demerit of NAND

Slow Random Access TIme

Difficulty of Byte Programming

Demerit of NOR

Slow Program Speed

Slow Erase Speed

Applications

Suitable for ***Data Memory***
(Handy Terminal, Voice Recorder,
Digital Still Camera, Silicon Audio, etc.)

Applications

Replacement of EPROM/MRO
Suitable for ***Code Memory***
(BIOS, Cellula/PHS, HDD, etc)

NOR vs NAND system interface

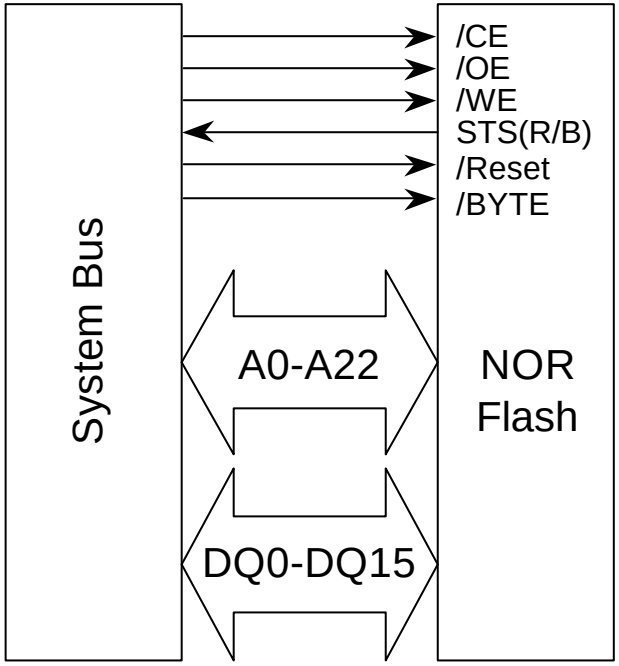

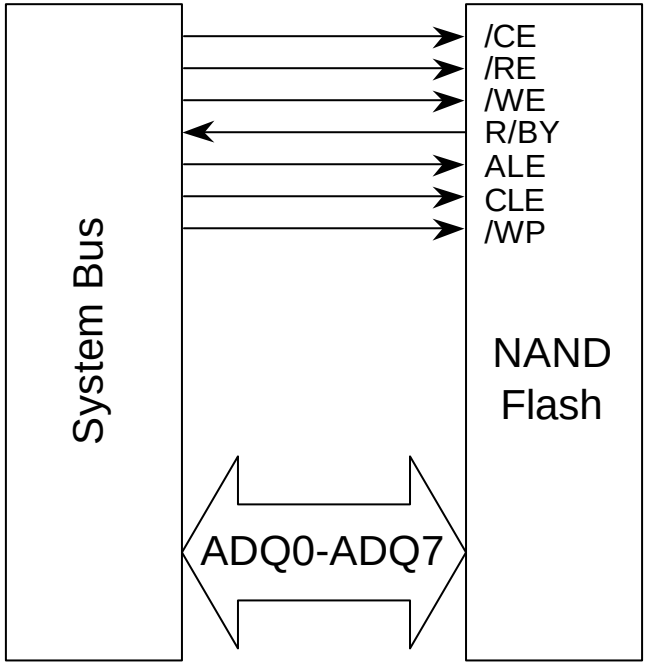

TOSHIBA

Erase Cycle Timing

Erase Cycle

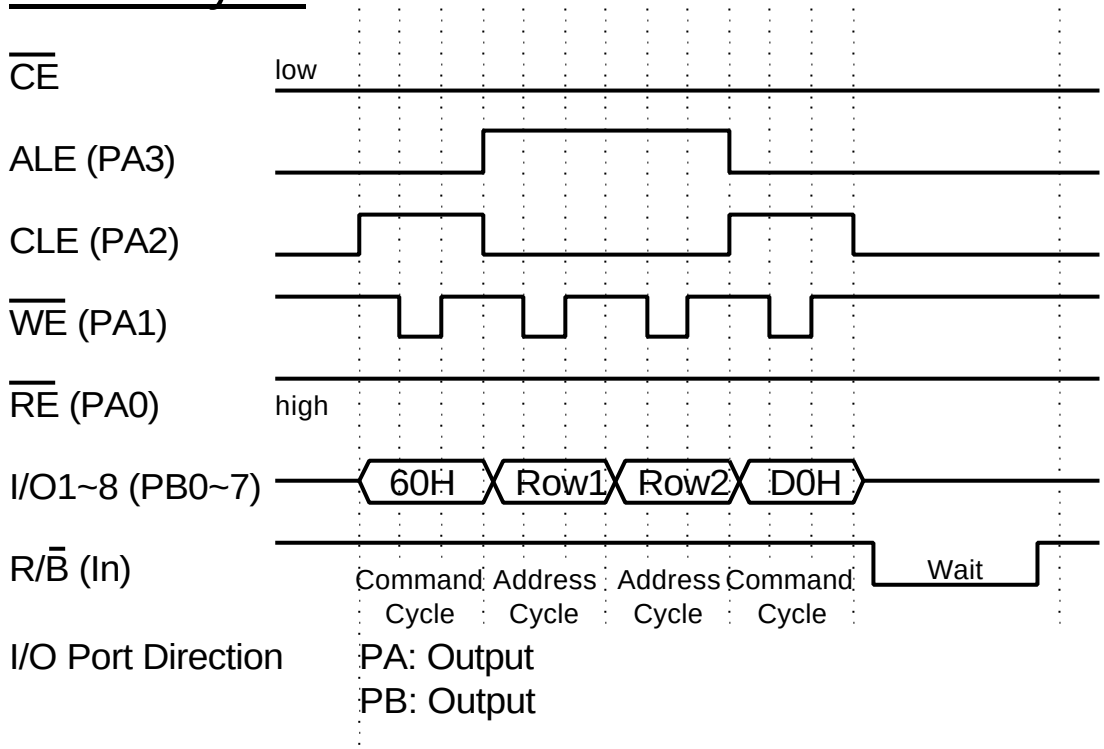

Read Cycle Timing

Read Cycle

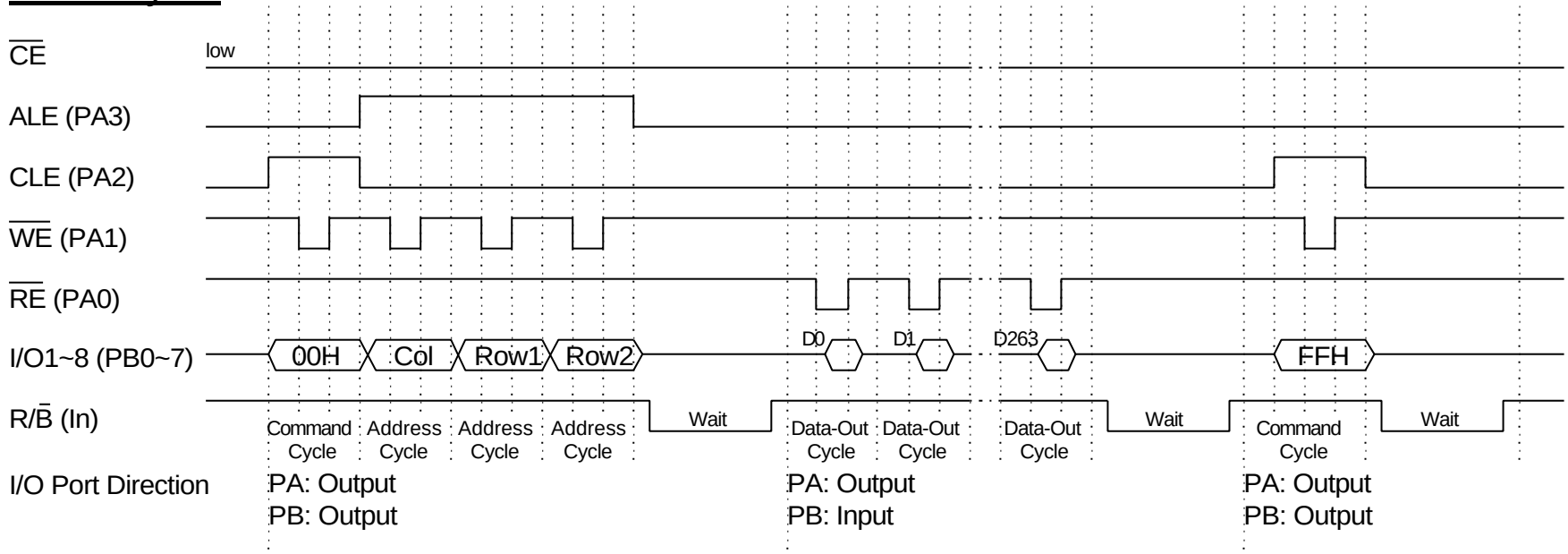

Write Cycle Timing

Write Cycle

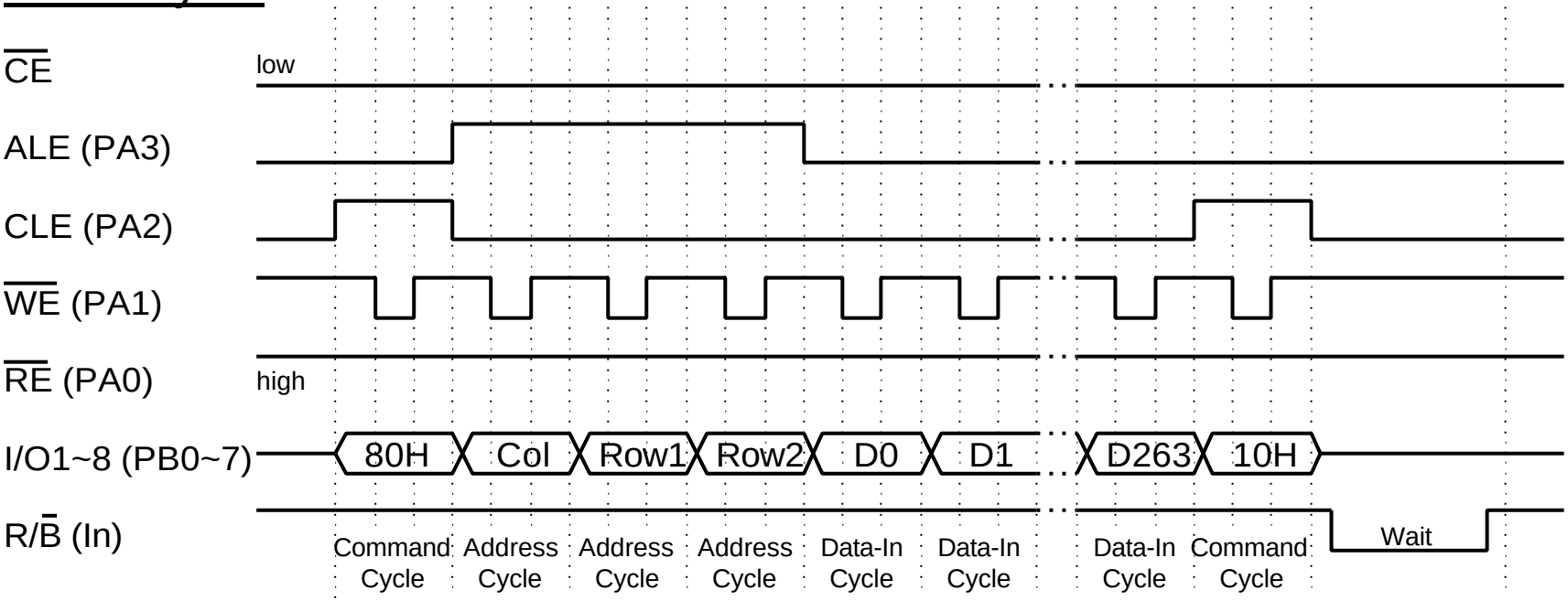

I/O Port Direction

PA: Output
PB: Output

TOSHIBA

8MByte SmartMedia™ Specification

- Organization

EEPROM :(8M+256K)x8 (NAND FLASH)
Register :(512+16)x8
Page Size :(512+16)Byte
Block Size :(8K+256)Byte

-Single 3.3V Operation

-Program / Erase

Auto Page Program :(512+16)Byte / 200us
Auto Block Erase :(8K+256)Byte / 2ms

-Access Time

Random Access :7us
Serial Access :50ns

- Pin-out

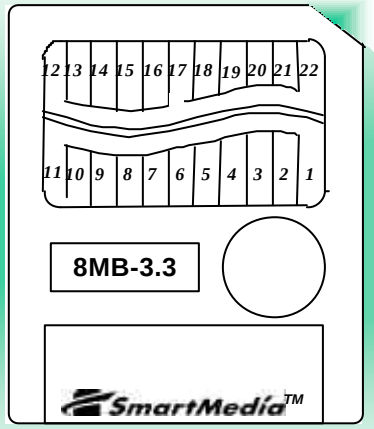

TC58V64DC

1,10,11,,	Vss	GND
,,2,,,,CLE		Command Latch Enable
,,3,,,,ALE		Address Latch Enable
,,4,,,,/WE		Write Enable
,,5,,,,/WP		Write Protect
,6-9, ,I/O1-4		Input / Output Port
13-16, I/O5-8		Input / Output Port
,,17,,,LVD		Low Voltage Detect
,,18,,,GND		GND Input
,,19,,,R/B		Ready / Busy
,,20,,,/RE		Read Enable
,,21,,,/CE		Chip Enable
,22,12,,	Vcc	Power Supply,,

- Address Input Cycle

	I/O 1	I/O 2	I/O 3	I/O 4	I/O 5	I/O 6	I/O 7	I/O 8
1st Cycle	A0	A1	A2	A3	A4	A5	A6	A7
2nd Cycle	A9	A10	A11	A12	A13	A14	A15	A16
3rd Cycle	A17	A18	A19	A20	A21	A22	L	L

A0 - A7 : Column Address
A9 - A12 : NAND Address } Page (Row) Address
A13 - A22 : Block Address

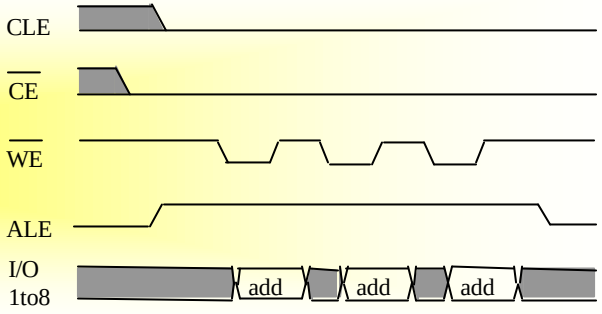

NAND Performance Estimation

- **Reference model**

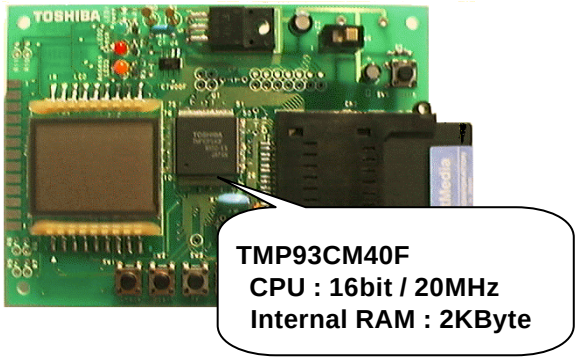

- ECC Calculation (40Ksteps) : 4ms / 512 Byte (page).
- Data transfar to NAND & Programing time : 1ms / page
- Block erase time (32pages) : 3ms / block

16KB / 163ms = <u>100KB / s</u>

- **Estimation**

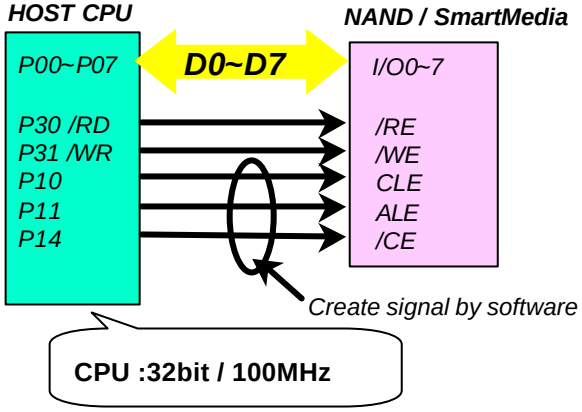

- ECC Calculation 40Ksteps) : 0.8ms / 512 Byte (page).
- Data transfar to NAND & Programing time : 0.7ms / page
- Block erase time (32pages) : 3ms / block

ECC Software :16KB / 51ms = <u>300KB / s</u>
ECC Hardware :16KB / 19ms = 0.8MB /s .

SmartMedia PC peripheral devices

ISA Interface

FDD Adapter

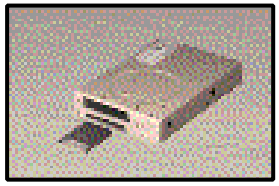

SCSI Interface

SmartMedia™

Parallel Port

(No ATA I/F) (ATA I/F)

PC Card Adapter

USB Interface

TOSHIBA

ID Number Specification for SmartMedia

Embedded 128bit ID number in every SmartMedia

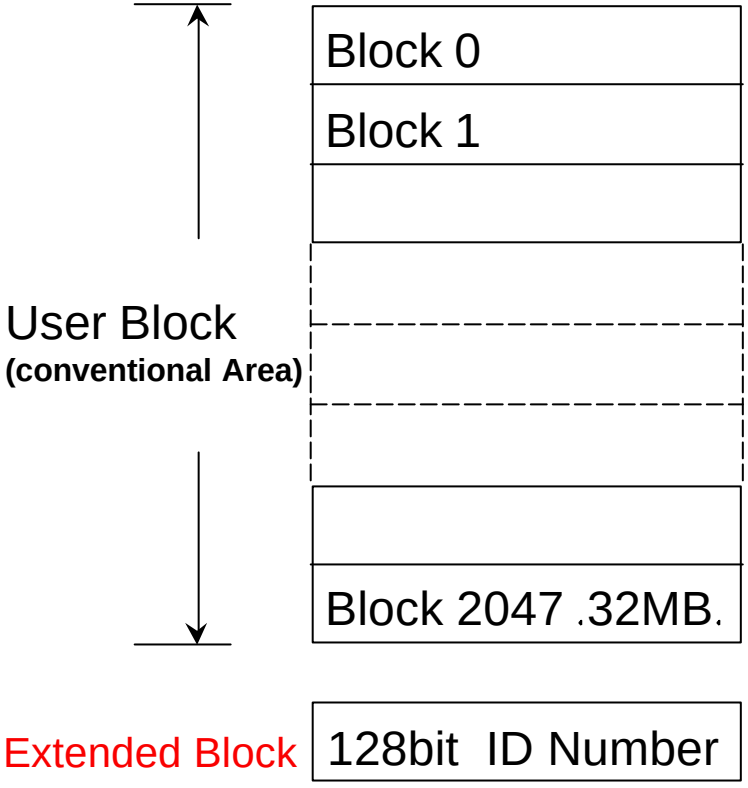

Characteristics of Extended Block

- Use (Redundant) Block as a extended Block
- Special command for Extended Block access (need NDA)
- Embedded 128bit ID Number
- Inhibit block erase function (by cutting isolation fuse)

SmartMedia™ Specifications

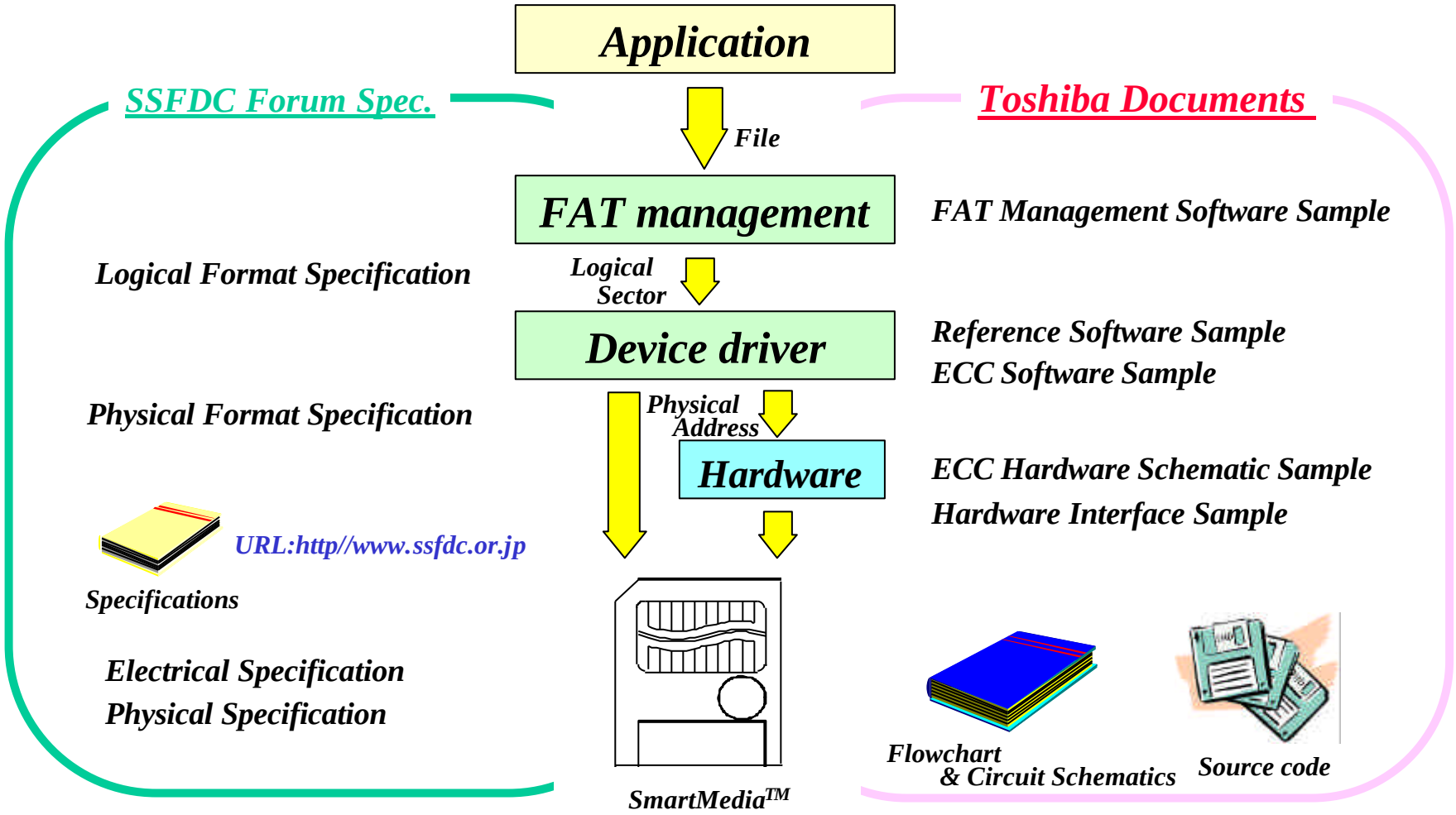

0.16 ㎜ 512Mbit NAND Flash Memory

- 4page Programming for High High Performance

	1page programming (conventional feature)	4page programming (new feature)
Internal Operation	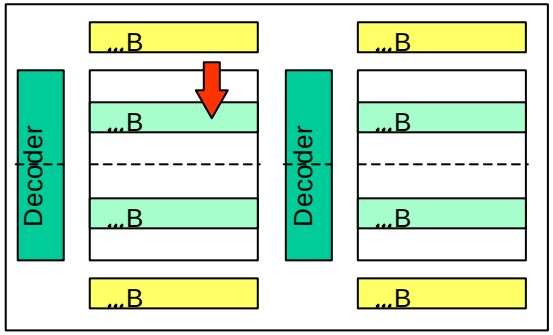	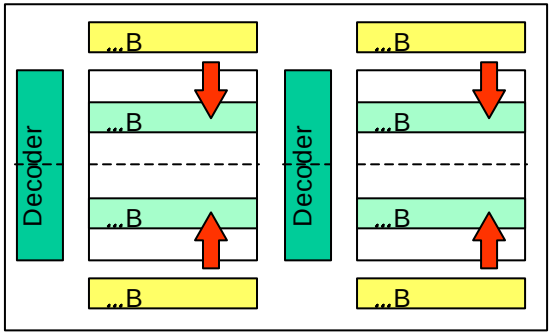
Page Size Block Size Program Speed	Page Size = 512Byte Block Size=16KByte Program Speed=2.3MB/s	Page Size = 2KByte Block Size=64KByte Program Speed=6.8MB/s

Small Form Factor Card Comparison

Card Name	SmartMedia	CompactFlash	MultiMedia Card	MemoryStick	SD Memory Card	Secure MultiMediaCard
Main Manufacturer	• Toshiba • Samsung	• SanDisk • Hitachi • Mitsubishi	• SanDisk • Hitachi	• Sony	• Toshiba • Panasonic • SanDisk	• Hitachi • Infineon
Interface type	Original	PC ATA	Original	Original	Original	Original
Controller	Without	With	With	With	With	With
Max. Capacity('99/11)	64MB	320MB	32MB	64MB	(64MB)	(64MB)
Card dimensions(mm)	45x37x0.76	42.8x36.4x3.3	32x24x1.4	21.5x50x2.8	32x24x2.1	32x24x1.4
Total pin count	22	50	7	10	9	13
I/O pin count	x8	x8 / x16	x1	x1	x4	x8
View						

TOSHIBA