Mass Storage Application

Memory Product &
Technology Division

2000.03.15

Mass Storage Application Area

Flash Card	**Small Form Factor Card** - Audio/Video multimedia - Digital still camera - Companion PC - SmartPhone data	**PCMCIA Card Form Factor** - PCMCIA-ATA card - PCMCIA linear card
Embedded Disk	**Data Processing** - Hand held PC, PDA - POS terminal - Word processor,Laser prints **Telecommunication** - Answering machine - Central office switching - Network equipment **Consumer** - Digital camera - Voice Recorder - Dictation machine(Recorder) - Game cartridges - Music Player	**Transportation** - Automotive - GPS(Global positioning system) - Air-bag - Voice recorders(Aircraft) **Others** - Vending machine - Medical Instruments - Test equipment - Modem

Mass Storage Flash Requirements

- Small and Thin Package
- Highest Density & Performance
- High Endurance
- Single Supply
- Low Power Consumption
- Forward/ Backward Compatibility
- 2nd Source

- Fast Erase
- Page Programming
- High Speed Sector Read
- Low Pin-Count
- Low Cost

Why is Samsung`s Mass Storage Flash the Ideal Solution ?

Feature	NAND	NOR	Comments
Low Pin Count	20 Pin	~56 Pin	High Packing Density
Upgradability	to 1Gb	N/A	
Small Erase Block Size	8/16 KB	64K/128K Bytes	High Performance & Rel
High Speed Seq. Access	Avail	N/A	I/O Mapping
Sector Read Speed	> 6-14 MB/sec	> 10 MB/sec	Comparable Performance
Fast Erase	2ms	.6 sec - 20 sec	100x-1000x Faster Erase
Page Programming	512B	1B/1W/8DW	2x-6x Faster Write
Additional Area	16B/page	N/A	Support CRC/ECC area
Power	Low	High	30%-50% Lower
Chip Size/Cost	Low	High	Lowest Cost/MB
Endurance	1M	100K-1M	High

Samsung NAND Flash with MASS STORAGE Interface/Functionality is

LOWEST COST/HIGHEST PERFORMANCE SOLUTION

Small and Thin Package in NAND Flash

4Mb,8Mb,16Mb,32Mb,64Mb

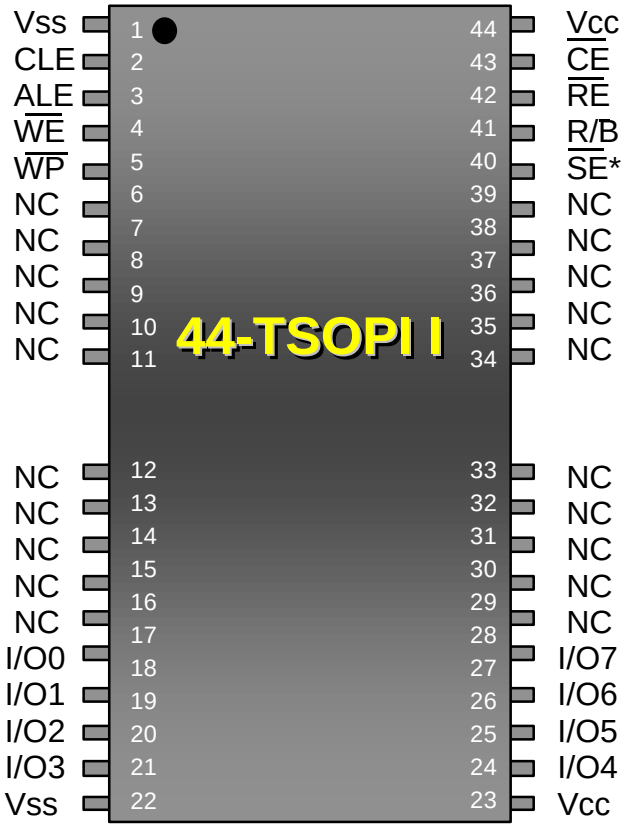

*: SE pin is used in 32Mb, 64Mb

128Mb, 256Mb

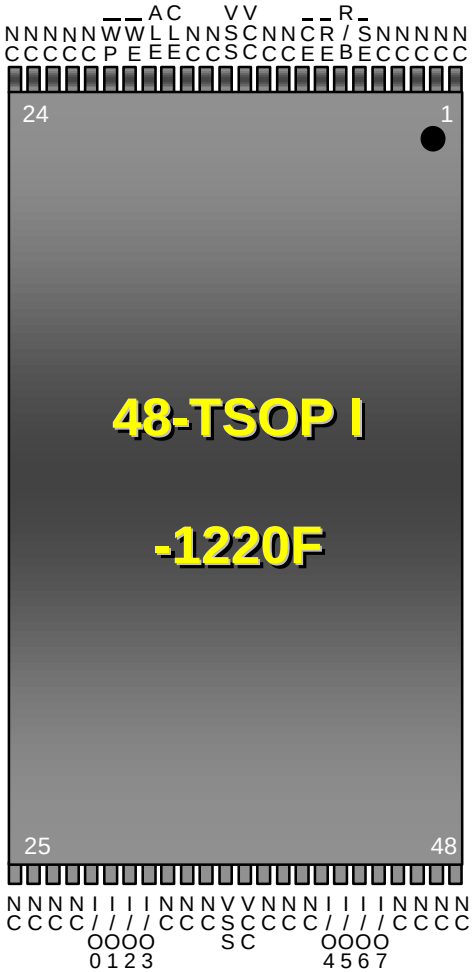

PKG comparison

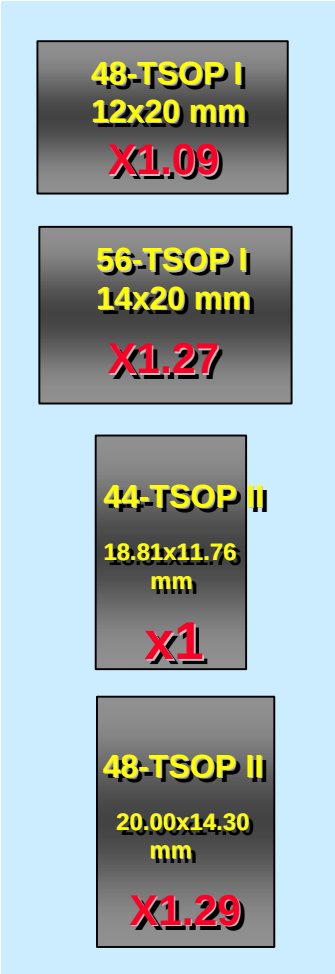

Dual Foot Print Solution in NAND Flash Memory

- **Dual foot print design between 44 TSOP2 and 48 TSOP1**

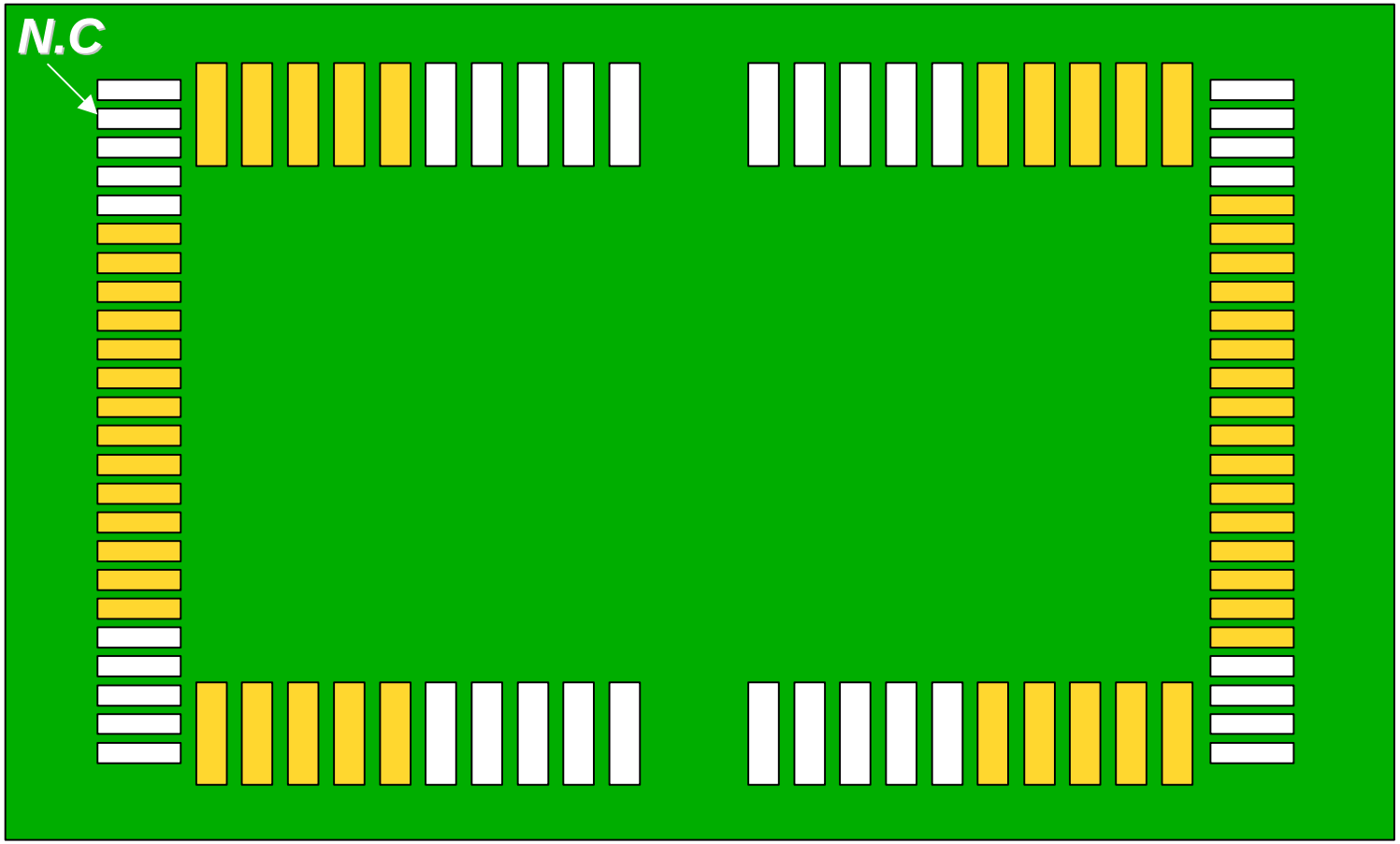

Highest Density and Performance in NAND Flash

The highest density and performance, at lowest power, still most endurable Flash available from Samsung

Samsung is " the Leader " of Mass-storage Flash

	I-Comp.	H-Comp.	S-Comp.	Samsung
Density	64Mb	64Mb	64Mb	128Mb
Cell type	NOR(MLC)	AND	NOR	NAND
Status	M/P	M/P	M/P	M/P
Power	5V	3.3V	3.3V	2.7V~3.6V
Program	6us/Byte	2.5us/Byte	-	0.5us/ Byte
Endurance	100K	10K	-	1M

NAND Flash Performance Evolution

- As the density increases, so does the bandwidth.

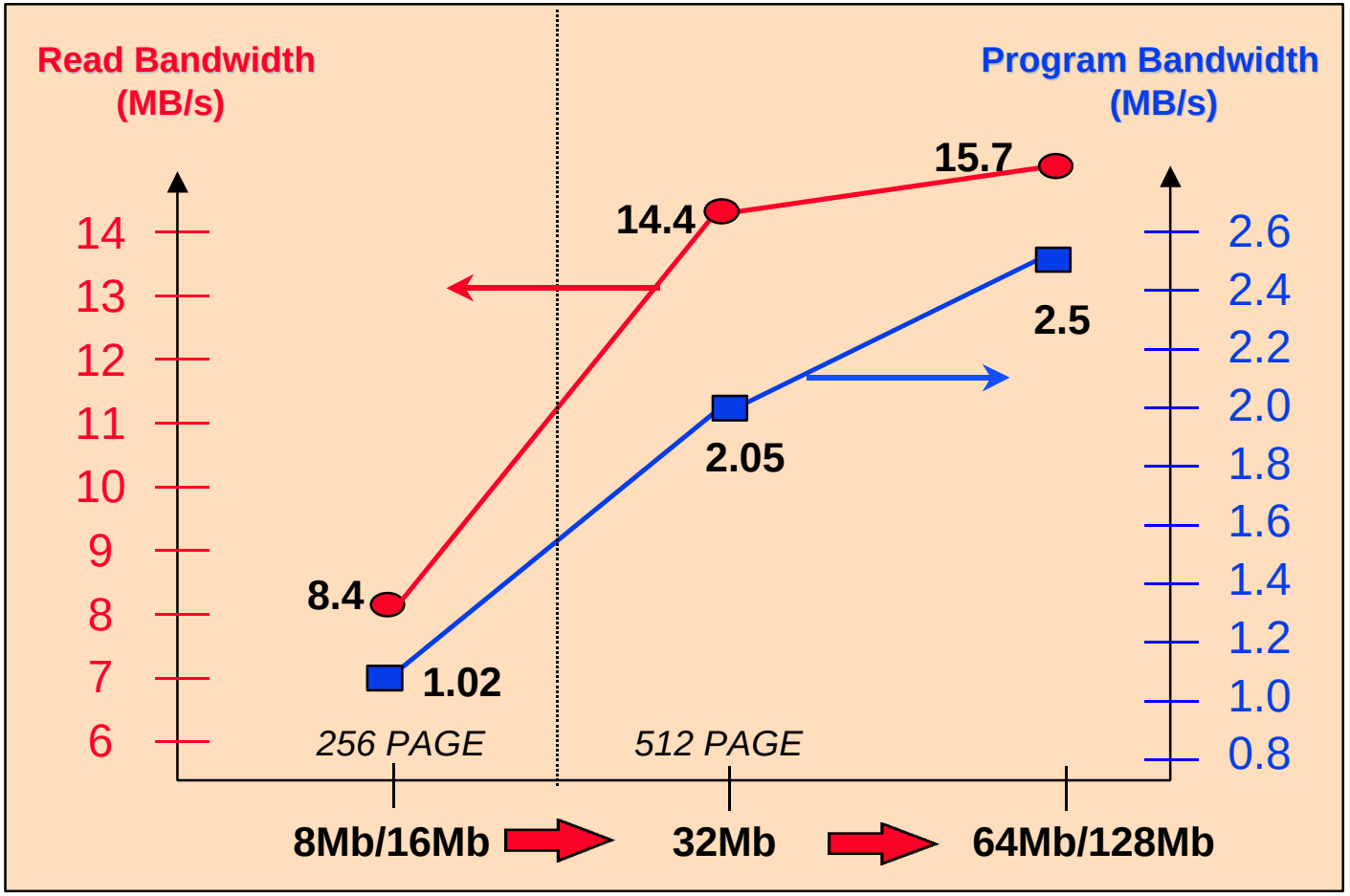

Forward & Backward Compatibility

- **Consistent architecture** in pinout, package, block size, and page depth

Density	4M	8M	16M	32M	64M	128M	256M	512M	1G
Technology	Single Bit								
							MLC		
Package Type	44TSOP2					48 TSOP I (12x20mm)			
	Smart Media								
Block Size	4KB			8KB		16KB			
Page Size	32B	256B		512B					
Vcc	3.0V~ 5.0V	2.7V~5.5V				2.7V~3.6V			
# of Address Cycle	3 Cycle							4 Cycle	
ECC Proposal	1bit Correction per Sector								

3 rd Party Support for NAND Flash Memory

Controller Support

1. Samsung (Mass Production : 2000.2Q)

> PC Card ATA/IDE Compatible Host Interface (Automatic sensing).
> Host Data Transfer Rate : up to 20MBps.
> Flash Data Transfer Rate : up to 10MBps
> Support up to 32 flash memory
> Power Consumption (@ 20Mhz, 5.0V) :
. Active : 30mA, Idle Mode : 20mA, Stop : 30uA
> 144LQFP, 100TQFP

2. Feiya(www.feiya.com/tw), Lexar,Oki and Toshiba

Software Support

1. M-System : TFFS
2. Phoenix : Picostor
3. TED : Angel
4. Samsung : Sample ‘C’ source Code

Samsung Controller Main Features

- PCCARD-ATA/IDE Compatible Host Interface
- Automatic Sensing of PC CARD-ATA and 68-pin IDE
- Included 256-byte CIS RAM
- Host Data Transfer Rate :
  - Up to 20.0MB/S
- Flash Data Transfer Rate :
  - Up to 10.0MB/S
- Support 3 Power Save Mode :
  - Stop/Idle/Active
- Support up to 32 Flash Memories
- Auto Power Down Function
- Support 32-Mbit, 64-Mbit, 128-Mbit 256-Mbit NAND Flash
- Internal ROM(OTP)
- Built-in ECC
- 144-LQFP, 100-TQFP
- Power Consumption(@20MHz, 5.0V)
  - Active Mode : 30mA
  - Idle Mode : 20mA
  - Stop Mode : 30uA
- Controller itself handles ECC, Wear-leveling, and mapping-out algorithm
- M/P : 2000.4
- E/S : NOW

Samsung ATA Flash Card Controller (I)

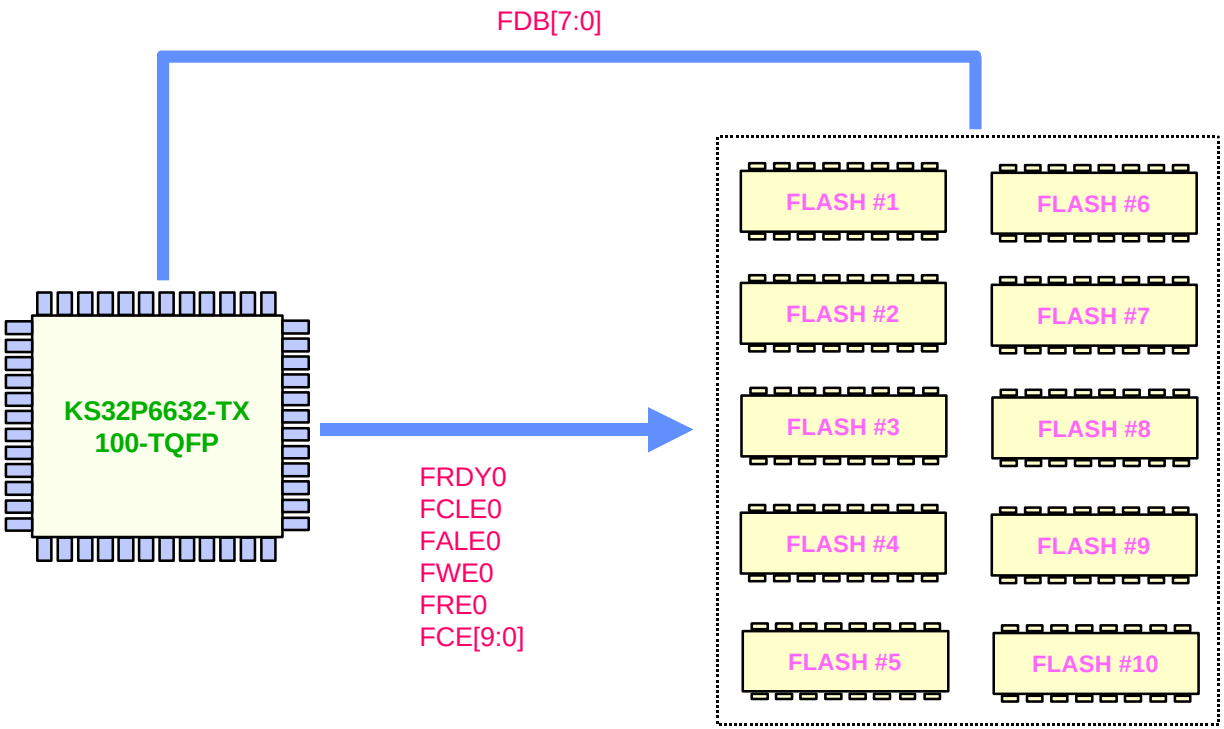

Case of Using the KS32P6632-TX(100 TQFP)

Samsung ATA Flash Card Controller (II)

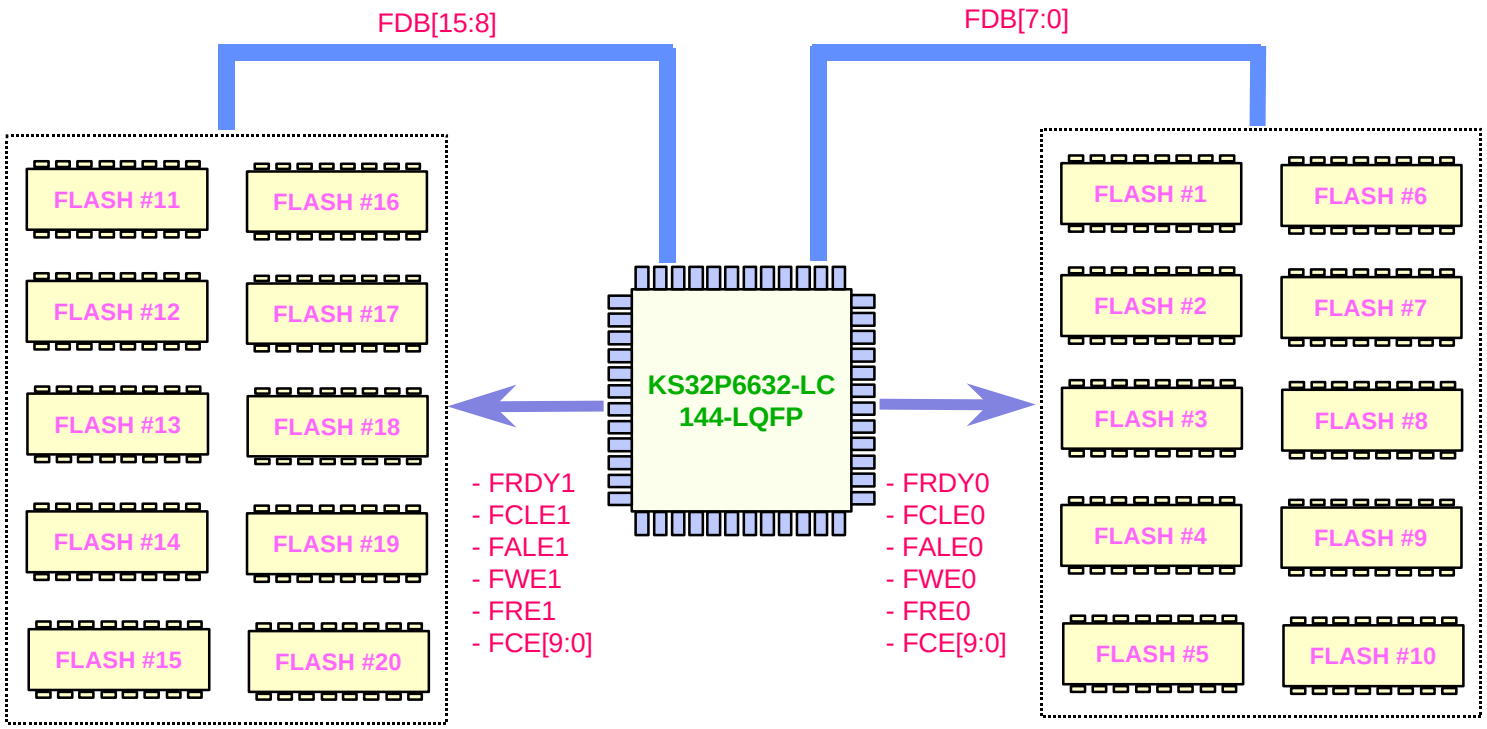

Case of Using the KS32P6632-LC(144 LQFP)

Samsung ATA Flash Card Controller (III)

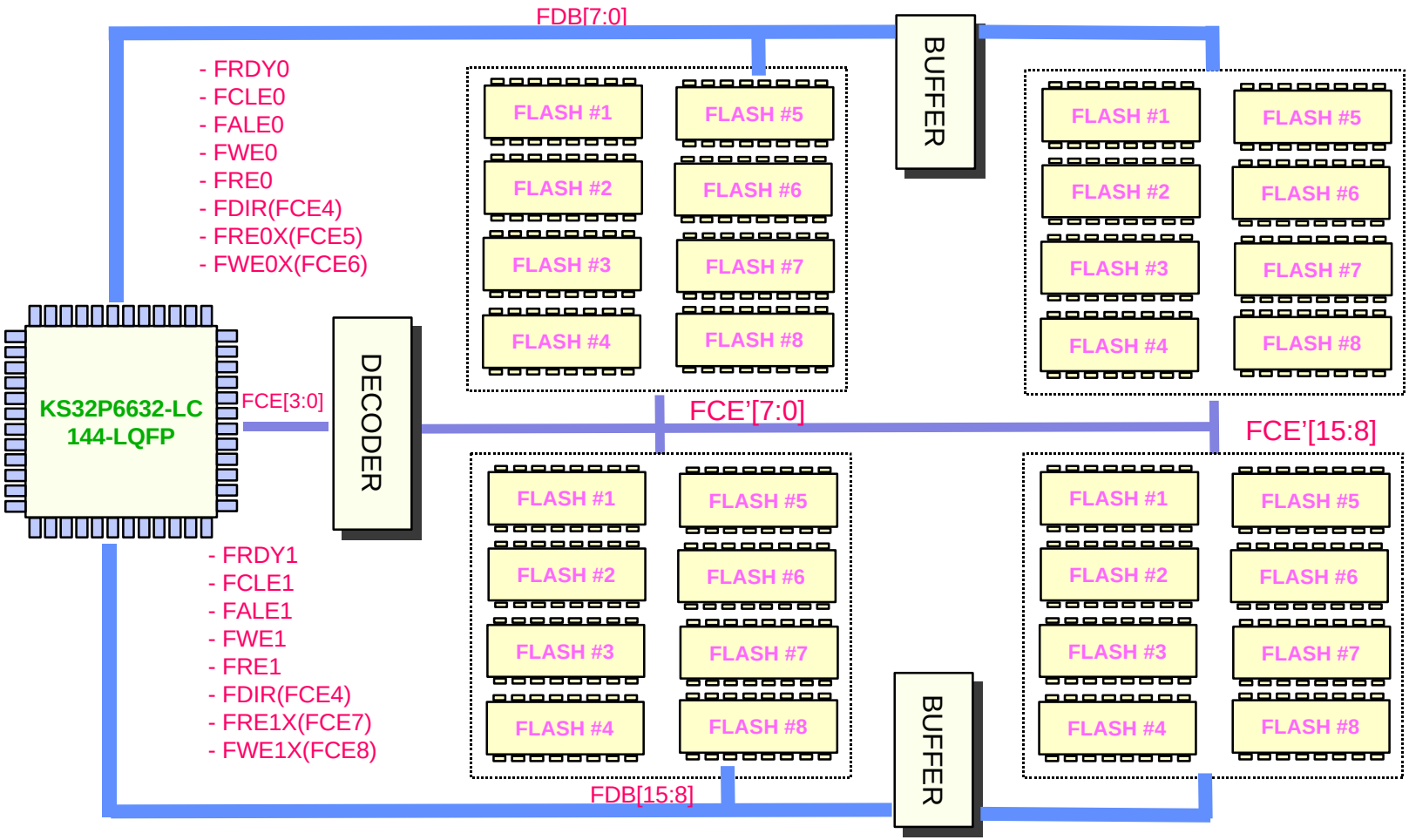

Case of Using the KS32P6632-LC(144 TQFP, Extend)

Block Diagram (KS32P66632-LC/TX)

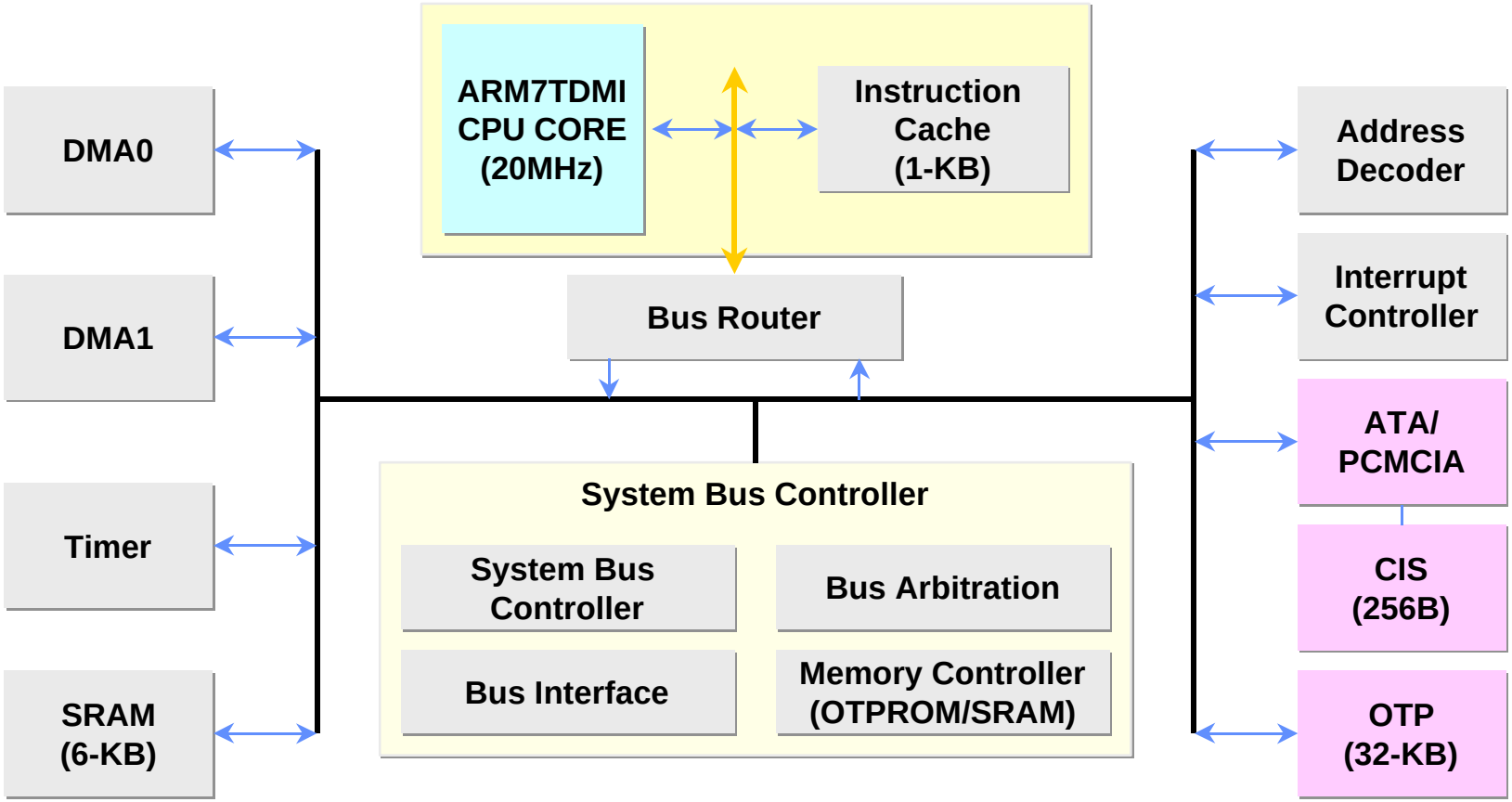

Performance Comparison of Speed and Power

■ Test Conditions

Condition Host PC : AT1500, PCMCIA Controller : VG365, I/F Voltage : 5V

Test Bat

Write.bat
Copy C:\test\1.bin F:
Time 12:00:00.00
Copy F:\1.bin D:\
Time

Read.bat
Copy C:\test\1.bin D:
Time 12:00:00.00
Copy D:\1.bin F:\
Time

C: is Hard disk, F : is ram disk, D: is CF cardTest File Name : 1.bin, Test File Size : 1,056KB

■ Test Results

Vendor	Density	Operation	Speed(sec)	KB/sec	Power(mA)
Samsung	8MB CFC	Write	1.422	742.6	17.5
		Read	1.126	937.8	14.5
S-Company	10MB CFC	Write	4.200	251.4	59
		Read	1.194	884.4	62 ~ 73
H-Company	8MB CFC	Write	1.786	591.3	22 ~ 23
		Read	1.090	968.8	16 ~ 28